higher education & training

Department:
Higher Education and Training
REPUBLIC OF SOUTH AFRICA

NATIONAL CERTIFICATE

INDUSTRIAL ELECTRONICS N2

(8080602)

18 November 2024 (X-paper)
09:00–12:00

Drawing instruments and non-programmable calculators may be used.

This question paper consists of 7 pages and a formula sheet of 2 pages.

003Q1E2418

Copyright reserved

DEPARTMENT OF HIGHER EDUCATION AND TRAINING
REPUBLIC OF SOUTH AFRICA

NATIONAL CERTIFICATE
INDUSTRIAL ELECTRONICS N2
TIME: 3 HOURS
MARKS: 100

INSTRUCTIONS AND INFORMATION

1. Answer all the questions.
2. Read all the questions carefully.
3. Number the answers according to the numbering system used in this question paper.
4. Approximate all final answers accurately to THREE decimal places.
5. Use only a blue or black pen.
6. Drawings must be large, neat and clear.
7. Use a pencil to draw the sketches and diagrams.
8. Write nearly and legibly.

Copyright reserved

QUESTION 1: GENERAL

Choose a symbol from COLUMN B that matches a description in COLUMN A. Write only the letter (A–M) next to the question number (1.1–1.10) in the ANSWER BOOK.

COLUMN A		COLUMN B	
1.1	NPN transistor	A 	J 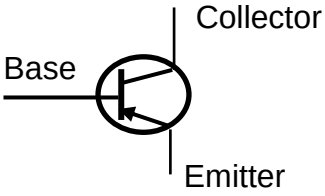
1.2	Diode	B 	
1.3	Battery	C 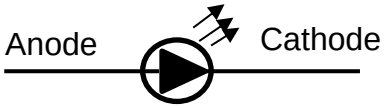	K 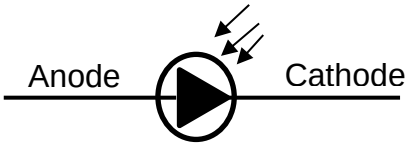
1.4	Photodiode	D 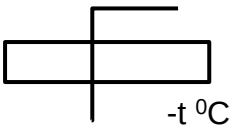	L 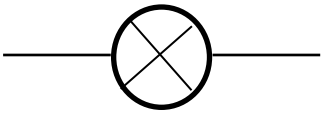
1.5	Light-emitting diode	E 	M 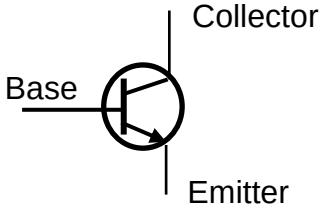
1.6	Light-dependent resistor	F 	
1.7	Varactor diode	G 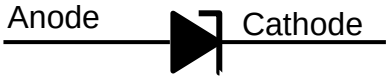	
1.8	Negative temperature coefficient (NTC)	H 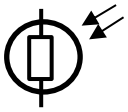	
1.9	PNP transistor	I 	
1.10	Capacitor		

(10 × 1) **[10]**

Copyright reserved

QUESTION 2: DIRECT-CURRENT THEORY

Refer to FIGURE 1 and determine the following:

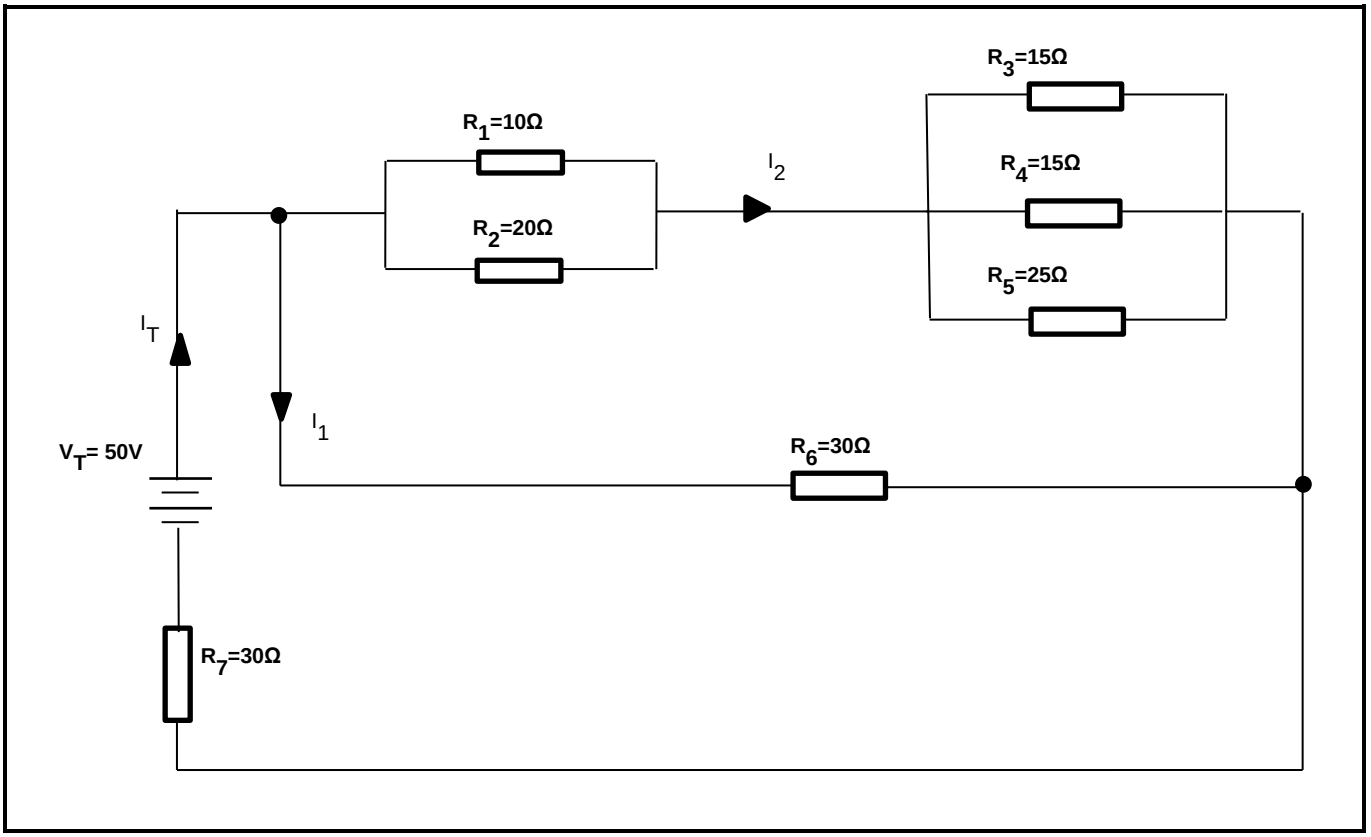

FIGURE 1

2.1	Total resistance (R_T)	(10)
2.2	Total current (I_T)	(2)
2.3	Voltage across R_7	(2)
2.4	Current I_1 and I_2	(4)
2.5	Total power consumed in the circuit	(2)
		[20]

QUESTION 3: ALTERNATING-CURRENT THEORY

3.1 The following table shows angles in degrees and in radians. Convert the degrees to radians or radians to degrees and write only the missing angle next to the question number (3.1.1–3.1.5) in the ANSWER BOOK.

DEGREES	RADIANS
0°	0
45°	**(3.1.1)**
(3.1.2)	π
(3.1.3)	$\frac{5\pi}{4}$
300°	**(3.1.4)**
(3.1.5)	$\frac{11\pi}{6}$

(5 × 1) (5)

3.2 Refer to the circuit in FIGURE 2 and determine the following:

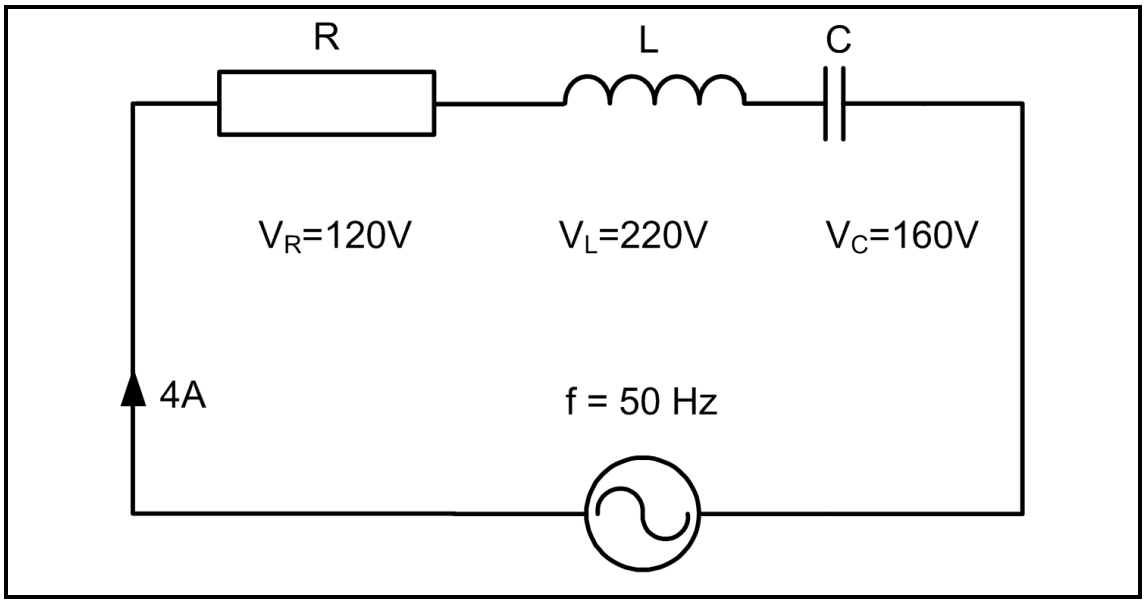

FIGURE 2

3.2.1 The value of the resistor (R) (3)

3.2.2 The value of the inductance (L) (4)

3.2.3 The value of the capacitor (C) (4)

3.2.4 The impedance (Z) (4)

[20]

Copyright reserved

QUESTION 4: SEMICONDUCTOR DIODES

4.1 Draw a fully labelled circuit diagram of a half-wave rectifier with a filter capacitor in the circuit. (6)

4.2 Explain the operation of a half-wave rectifier and the effect that a smoothing capacitor has on a circuit. (6)

4.3 State FIVE applications of the light-emitting diode (LED). (5)

[17]

QUESTION 5: TRANSISTORS AND DECIBEL

5.1 Draw a labelled circuit diagram showing the basic operation of a PNP transistor. Make use of electron current flow and show how the currents will flow in the circuit. (4)

5.2 Draw a neat, labelled circuit diagram of a common emitter transistor amplifier configuration using a NPN transistor. (6)

5.3 State the phase shift difference between the input and output of the following amplifiers:

5.3.1 Common collector

5.3.2 Common emitter

5.3.3 Common base

(3 × 1) (3)

5.4 If the input signal to an amplifier is 120 mV and the output signal is 6 V, calculate the voltage gain of the amplifier in decibels. (2)

[15]

QUESTION 6 : MEASURING INSTRUMENTS, TRANSDUCERS AND SYNCHROS

6.1 A moving coil measuring instrument with a resistance of 5 Ω gives a full-scale deflection if 10 mA flows through the coil.

Calculate the following:

6.1.1 The value of the shunt resistance (R_{SH}) required to use the instrument as an ammeter for a 2 A current flow

6.1.2 The multiplier resistor (R_S) required to use the instrument as a voltmeter of up to 12 V

(2 × 4) (8)

Copyright reserved

6.2 Draw TWO diagrams to show the operating principle of the bimetal strip when heated and when cooled. (4)

6.3 Define a *synchro system*. (2)

6.4 State FOUR applications of synchro systems. (4)

[18]

TOTAL: 100

Copyright reserved

FORMULA SHEET

DIRECT-CURRENT THEORY

$$V = I \cdot R \qquad P = V \cdot I \qquad P = \frac{V^2}{R}$$

$$P = I^2 \cdot R \qquad R_T = R_1 + R_2 \qquad \frac{1}{R_T} = \frac{1}{R_1} + \frac{1}{R_2} + \frac{1}{R_3}$$

$$R_T = \frac{R_1 \times R_2}{R_1 + R_2} \qquad I_1 = \frac{R_2}{R_1 + R_2} \times I_T$$

ALTERNATING-CURRENT THEORY

$$t = \frac{1}{f} \qquad e = E_m Sin\theta \qquad e = E_m Sin\omega t$$

$$e = E_m Sin2\pi ft \qquad i = I_m Sin\theta \qquad i = I_m Sin\omega t$$

$$V_{rms} = 0{,}707 V_{max} \qquad I_{rms} = 0{,}707 I_{max} \qquad V_{ave} = 0{,}637 V_{max}$$

$$I_{ave} = 0{,}637 I_{max} \qquad Form\ factor = \frac{rms\ value}{average value}$$

$$Crest\ factor = \frac{maximum\ value}{rms\ value}$$

$$E_{ave} = \frac{e_1 + e_2 + e_3 + e_4 + e_5 + ...e_n}{n} \qquad I_{ave} = \frac{i_1 + i_2 + i_3 + i_4 + i_5 + ...i_n}{n} \qquad \omega = 2\pi f$$

$$E_{rms} = \sqrt{\frac{e_1^2 + e_2^2 + e_3^2 + e_4^2 + e_5^2 + ...e_n^2}{n}} \qquad I_{rms} = \sqrt{\frac{i_1^2 + i_2^2 + i_3^2 + i_4^2 + i_5^2 + ...i_n^2}{n}}$$

$$X_L = 2\pi fL \qquad X_C = \frac{1}{2\pi fC} \qquad V = I \cdot R$$

$$V_T = \sqrt{V_R{}^2 + V_C{}^2} \qquad V_T = \sqrt{V_R{}^2 + V_L{}^2} \qquad V_T = \sqrt{V_R{}^2 + (V_L \sim V_C)^2}$$

$$Z = \sqrt{R^2 + (X_L \sim X_C)^2} \qquad Z = \sqrt{R^2 + X_L{}^2} \qquad Z = \sqrt{R^2 + X_C{}^2}$$

$$I = \frac{V_T}{Z} \qquad I_R = \frac{V_T}{R} \qquad I_L = \frac{V_T}{X_L}$$

$$I_C = \frac{V_T}{X_C} \qquad I_T = \sqrt{I_R{}^2 + I_X{}^2} \qquad I_X = I_L \sim I_C$$

$$V_L = I \cdot X_L \qquad V_C = I \cdot X_C \qquad Z = \frac{V}{I_T}$$

$$\theta = \tan^{-1}\frac{I_X}{I_R} \qquad \theta = \cos^{-1}\frac{I_R}{I_T} \qquad \theta = \cos^{-1}\frac{R}{Z}$$

$$f_r = \frac{1}{2\pi\sqrt{LC}}$$

Copyright reserved

MEASURING INSTRUMENTS

$$R_{SH} = \frac{I_M R_M}{I_{SH}} \qquad R_S = \frac{V}{I_M} - R_M$$

TRANSISTORS

$$I_E = I_C + I_B$$

DECIBEL RATIOS

$$N = 10 log \frac{P_{OUT}}{P_{IN}} \qquad N = 20 log \frac{I_{OUT}}{I_{IN}} + 10 log \frac{R_{OUT}}{R_{IN}} \qquad N = 20 log \frac{V_{OUT}}{V_{IN}} + 10 log \frac{R_{IN}}{R_{OUT}}$$

If $R_{IN} = R_{OUT}$:

$$N = 20 log \frac{V_{OUT}}{V_{IN}} \qquad N = 20 log \frac{I_{OUT}}{I_{IN}}$$

RESISTANCE

$$R = \frac{\rho \ell}{A} \qquad A = \frac{\pi d}{4}$$

Copyright reserved